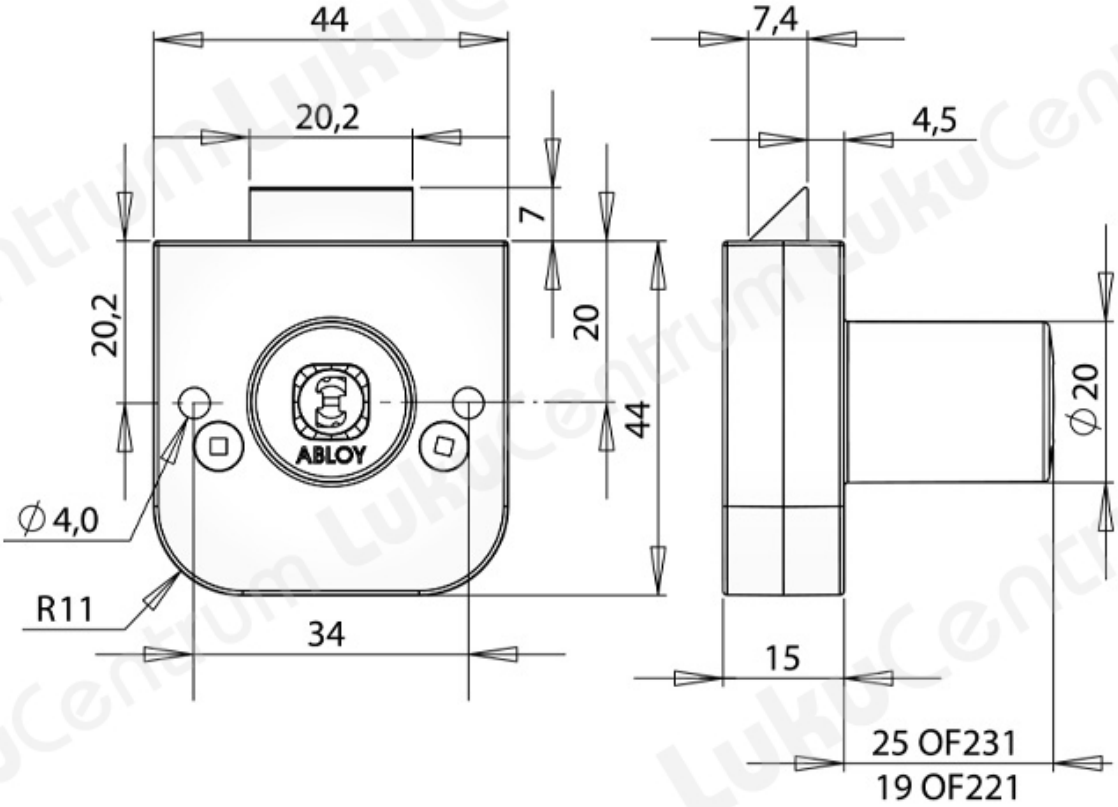TOOTENIMETUS	SOODUS	HIND
Cabinet lock ABLOY OF231C Classic (w 2 keys)		52.55 ?
Cabinet lock ABLOY OF231C Classic (w/o keys)		47.35 ?
Cabinet lock ABLOY OF231T Protec2 (w 2 keys)		166.85 ?
Cabinet lock ABLOY OF231T Protec2 (w/o keys)		117.99 ?