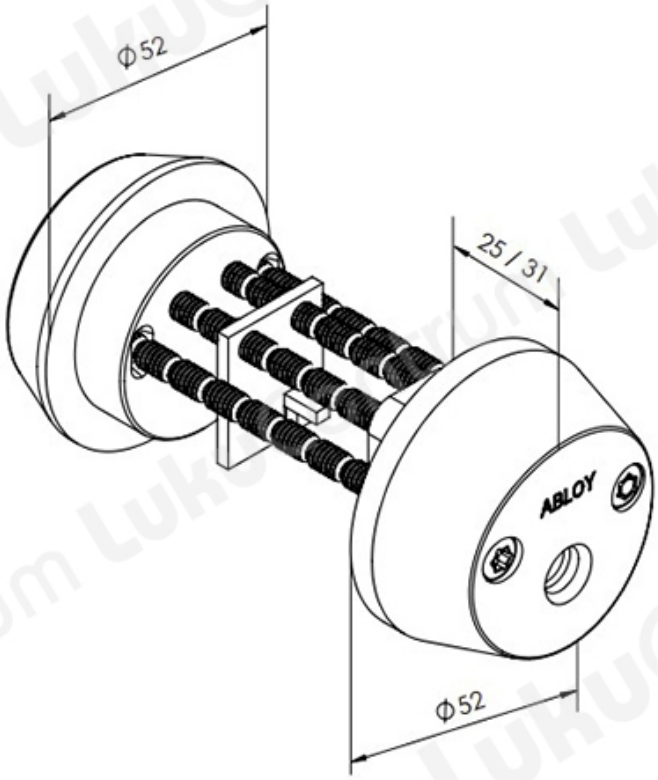TOOTENIMETUS	SOODUS	HIND
Cylinder ABLOY CY061T Protec2 CR (bright chrome, w 3 keys)		242.34 €
Cylinder ABLOY CY061T Protec2 CR (bright chrome, w/o keys)		162.96 €
Cylinder ABLOY CY061T Protec2 HCR (brushed chrome, w 3 keys)		266.55 €
Cylinder ABLOY CY061T Protec2 NiHa (brushed nickel, w/o keys)		187.40 €