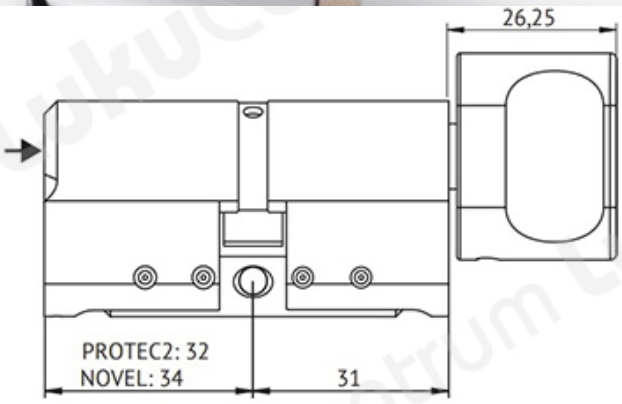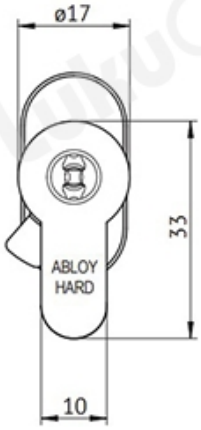TOOTENIMETUS	SOODUS	HIND
EURO lukusÃ¼damik ABLOY CY333U Novel CR (lÃ¤ikiv kroom, 3 vÃµtmega)		192.20 ?
EURO lukusÃ¼damik ABLOY CY333U Novel CR (lÃ¤ikiv kroom, vÃµtmeteta)		144.59 ?
EURO lukusÃ¼damik ABLOY CY333U Novel HCR (mattkroom, 3 vÃµtmega)		226.97 ?