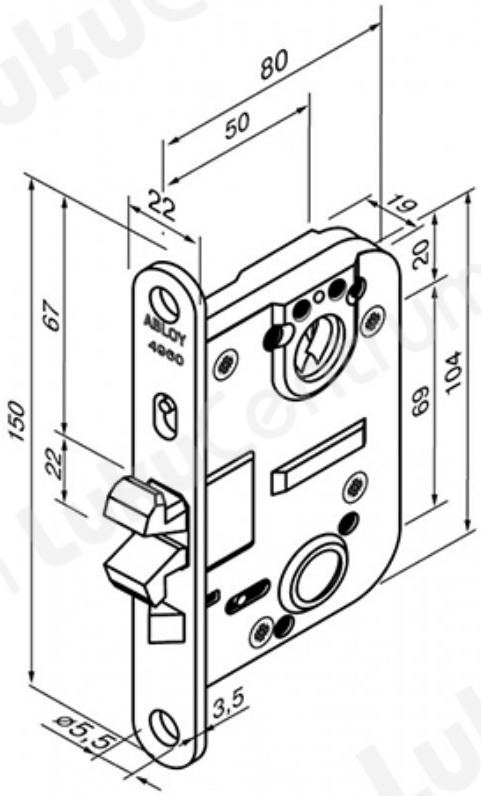TOOTENIMETUS	SOODUS	HIND
Lock case ABLOY 4960 Fe/Zn [illegible], CY028C, CY028U, CY028T, CY029C, CY029U, CY029T, CY060U, CY060T, CY061U, CY061T, CY062U, CY062T	Y6027,?	183.05?