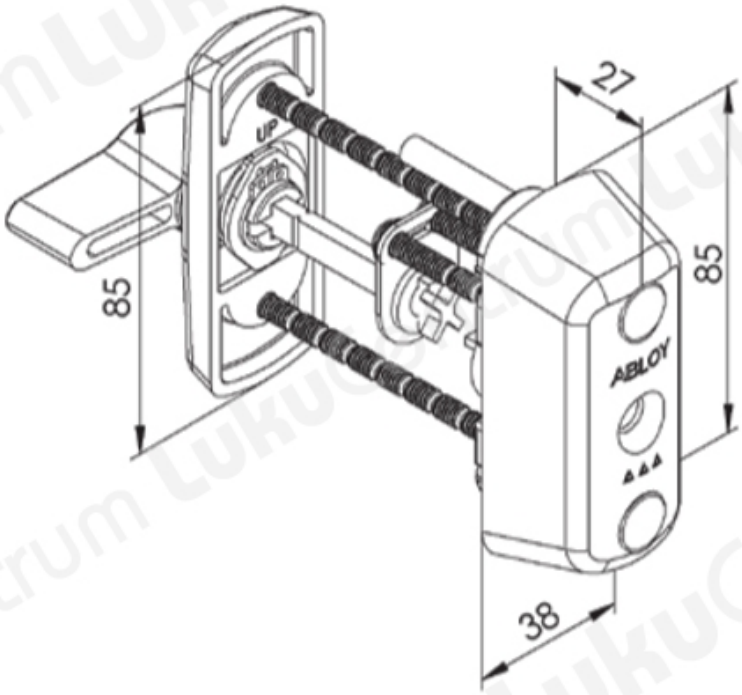TOOTENIMETUS	SOODUS	HIND
Ð¦Ð¸Ð¸Ð½Ð´Ñ? ABLOY CY066U Novel CR (Ð±Ð»ÐµÑ•Ñ?Ñ•Ñ?Ð¸Ð¹ Ñ Ñ?Ð¾Ð¼, c 3 ÐºÐ»Ñ?Ñ?Ð°Ð¼Ð¸)		166.94 ?
Ð¦Ð¸Ð¸Ð½Ð´Ñ? ABLOY CY066U Novel CR (Ð±Ð»ÐµÑ•Ñ?Ñ•Ñ?Ð¸Ð¹ Ñ Ñ?Ð¾Ð¼, Ð±ÐµÐ· ÐºÐ»Ñ?Ñ?ÐµÐ¹)		116.24 ?
Ð¦Ð¸Ð»Ð¸Ð½Ð´Ñ? ABLOY CY066U Novel HCR (Ð¼Ð°Ñ?Ð¾Ð²Ñ?Ð¹ Ñ Ñ?Ð¾Ð¼, c 3 ÐºÐ»Ñ?Ñ?Ð°Ð¼Ð¸)		184.95 ?
Ð¦Ð¸Ð»Ð¸Ð½Ð´Ñ? ABLOY CY066U Novel HCR (Ð¼Ð°Ñ?Ð¾Ð²Ñ?Ð¹ Ñ Ñ?Ð¾Ð¼, Ð±ÐµÐ· ÐºÐ»Ñ?Ñ?ÐµÐ¹)		130.28 ?
Ð¦Ð¸Ð»Ð¸Ð½Ð´Ñ? ABLOY CY066U Novel NiHa (Ð¼Ð°Ñ?Ð¾Ð²Ñ?Ð¹ Ð½Ð¸ÐºÐµÐ»Ñ?, c 3 ÐºÐ»Ñ?Ñ?Ð°Ð¼Ð¸)		192.66 ?
Ð¦Ð¸Ð»Ð¸Ð½Ð´Ñ? ABLOY CY066U Novel NiHa (Ð¼Ð°Ñ?Ð¾Ð²Ñ?Ð¹ Ð½Ð¸ÐºÐµÐ»Ñ?, Ð±ÐµÐ· ÐºÐ»Ñ?Ñ?ÐµÐ¹)		131.67 ?