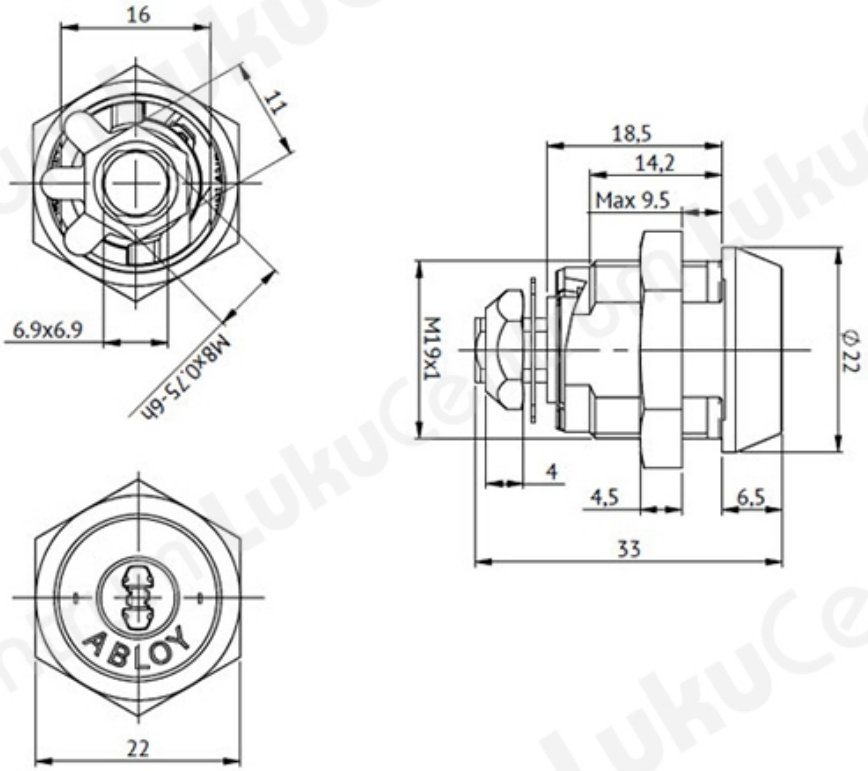TOOTENIMETUS	SOODUS	HIND
MetallmÃ¶Ã¶blilukk ABLOY CL107C Classic (2 [illegible]		40.61 ?
MetallmÃ¶Ã¶blilukk ABLOY CL107C Classic [illegible]		36.58 ?