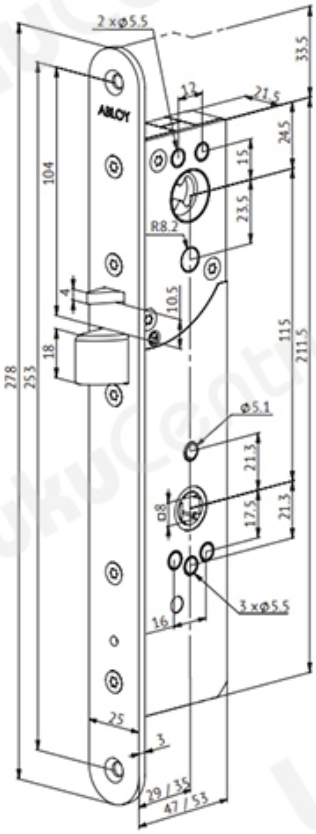TOOTENIMETUS	SOODUS	HIND
[illegible]	[illegible]	[illegible]
[illegible]	[illegible]	1396.05 ?
Mootorlukk Abloy EL495FL/35 mm (link pinge puudumise korral deaktiveeritud)		1402.82 ?