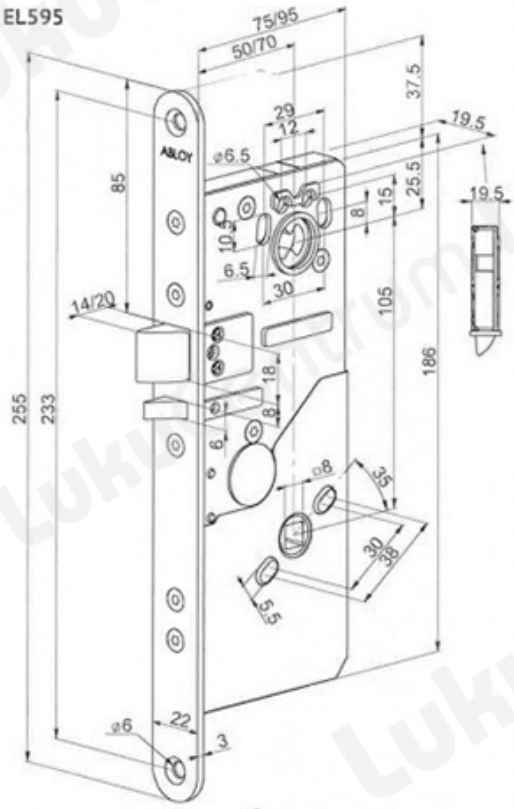TOOTENIMETUS	SOODUS	HIND
[illegible]		1296.36 ?