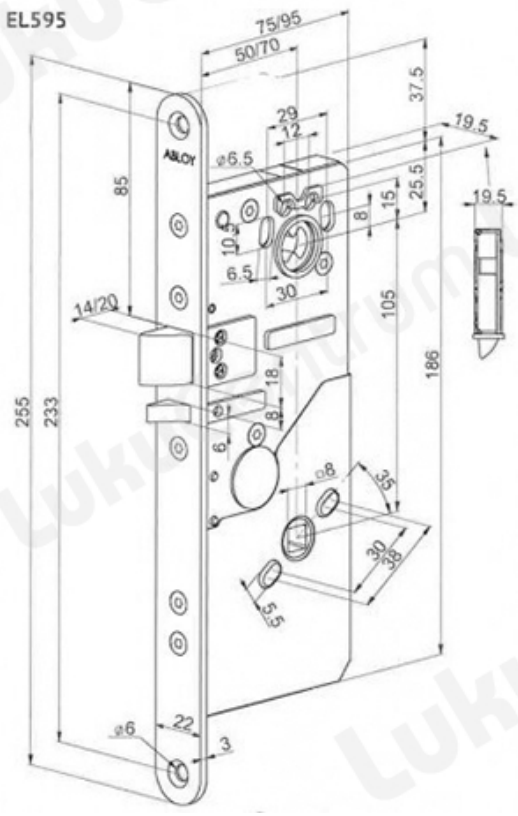TOOTENIMETUS	SOODUS	HIND
Motor lock Abloy EL595FU (handle activated in power off)		1296.36 ?