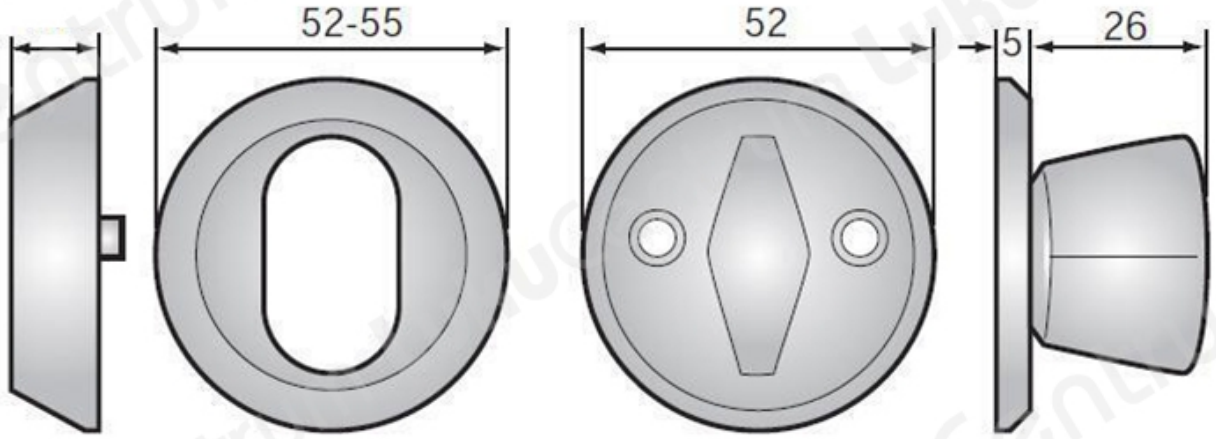TOOTENIMETUS	SOODUS	HIND
[illegible] mounting bolts for both cylinders and oval cylinder covers. ÐºÐ¾Ð»Ñ?Ñ?Ð¾Ð°Ð°Ð°Ð´ Ð¾Ð º ASSA 256F-18 Ð¼Ð¼ ÐºÐ¾Ð»Ñ?Ñ?Ð¾ (Ð±Ð»ÐµÑ•Ñ?Ñ•Ñ?Ð¸Ð¹ Ñ Ñ?Ð¾Ð¼)	62.58 ?	78.23 ?