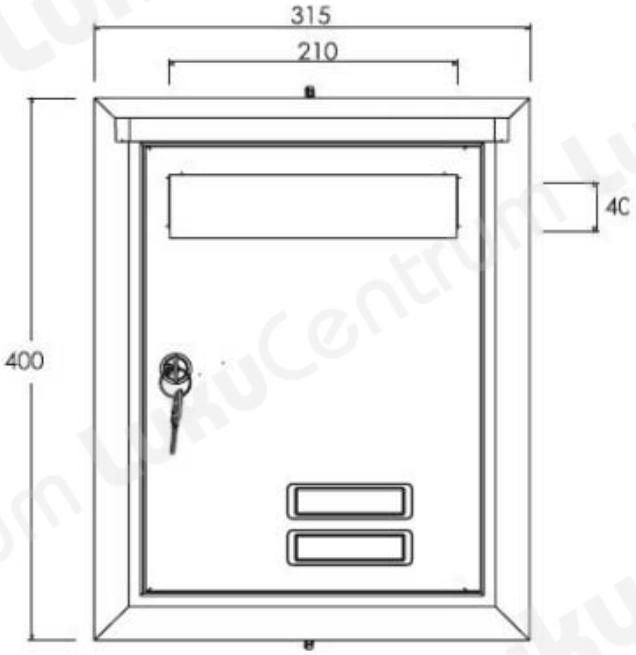TOOTENIMETUS	SOODUS	HIND
[illegible] weather resistance and equipped with a frame to cover the escape and rain cover) Ð²Ð³Ñ?Ñ? Ð¿Ð¾Ñ?Ñ?Ð¾Ð²Ð³Ð¾Ð¾ Ñ•Ñ?Ð¸Ð°Ð° Ñ• Ð»Ñ?Ð°Ð¾Ð¼Ð¹Silmec S691 (400 x 315 Ð¼Ð¼, Ñ•ÐµÑ?ÐµÐ±Ñ?Ñ•Ð½Ñ?Ð¹ Ð°Ð»Ñ?Ð¼Ð¸Ð½Ð¸Ð¹)		109.44 ?
Ð?Ð²ÐµÑ?Ñ? Ð¿Ð¾Ñ?Ñ?Ð¾Ð²Ð³Ð¾Ð¾ Ñ•Ñ?Ð¸Ð°Ð° Ñ• Ð»Ñ?Ð°Ð¾Ð¼Ð¹Silmec S691 (400 x 315 Ð¼Ð¼, Ñ•ÐµÑ?Ð¾Ñ•Ñ?Ð°Ð»Ñ?Ð½Ð¾Ð¹ Ð°Ð»Ñ?Ð¼Ð¸Ð¸ÐÐ¹)		109.44 ?