TOOTENIMETUS	SOODUS	HIND
Security lock ABLOY LC306/29 FE/ZL		129.92 ?
Security lock ABLOY LC306/30.5 FE/ZL		129.92 ?
Security lock ABLOY LC306/35 FE/ZL		129.92 ?
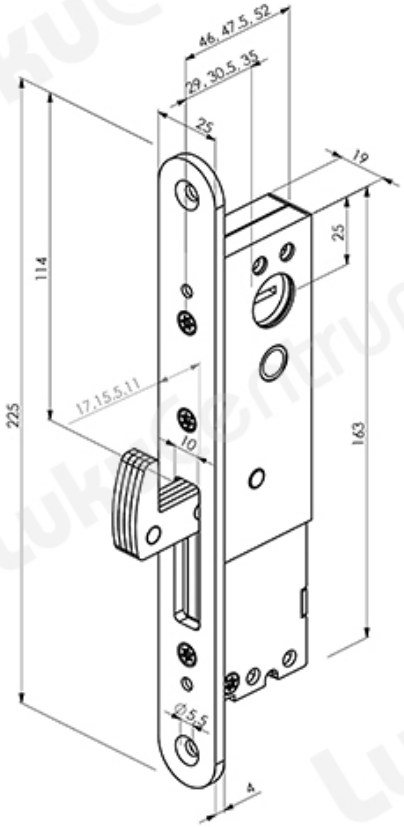
Operates with key from either side with a double cylinder or from outside with a cylinder and inside with a special thumb-turn or from one side only with a single cylinder. The key can only be removed when the hardened hookbolt is fully locked or retracted.