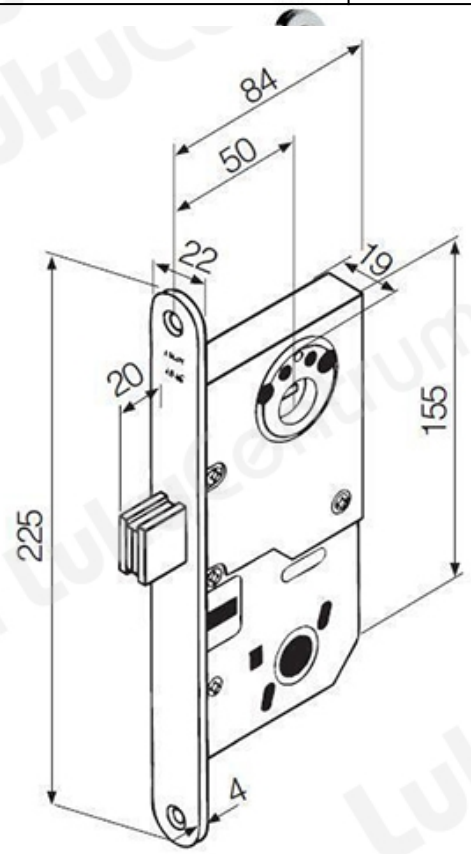TOOTENIMETUS	SOODUS	HIND
[illegible]	[illegible]	[illegible]
Turvalukk ABLOY 4181/50 Fe/ZL	101.53 ?	116.03 ?